Adding Safety and Mid Rail To Double Bunk Assembly Instructions

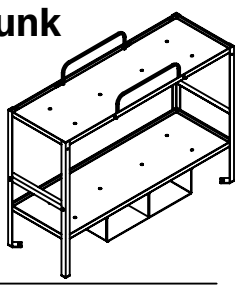

Model Number
kit-XXXXX

www.norix.com ǫ TEL 800 234-4900

Assembly Notes: Norix is not responsible for any damage due to improper installation. If your shipment does not match the parts list, please contact Norix Customer Service at 800-234-4900.
Norix reserves the right to modify design specifications at any time without an obligation to owners of previously sold products.

Parts List

ITEM	QTY.	PART NUMBER	DESCRIPTION
A	1	BF12-2FW-0064	Double Bunk 80"x27"x56"
B	2	036-262	Safety Rail
C	2	036-234	Mid Rail
D	8	026-005	Carriage Bolt 1/2-13x1 Zinc
E	8	026-004	Lock Washer .5" ID x .870" OD Zinc
F	16	025-008	Flat Washer 17/32" ID x 1 1/16" OD Zinc
G	8	026-016	Tri-Groove Nut 1/2-13 Zinc

Tools Needed

Low RPM Variable Speed Drill
17/32 Drill Bit
#40 Tri-Groove Socket

1. Drill 8 holes with 17/32 Drill bit 8 times at the dimension shown. 2 on left side, 2 on right side, 2 on back top and 2 on front top.

2. Assemble Carriage Bolt through Flat Washer, Safety Rail, Lock Washer and hand tighten using Tri-Groove nut on both sides of Safety Rail.

3. Repeat previos step for oposit side.

4. Assemble Carriage Bolt through Flat Washer, Mid Rail, Lock Washer and hand tighten using Tri-Groove nut on both sides of Mid Rail.

5. Repeat previous step for oposit side.
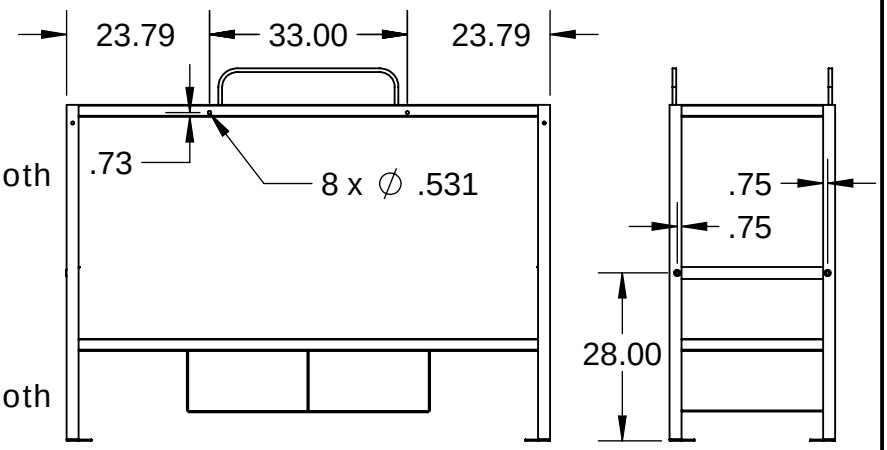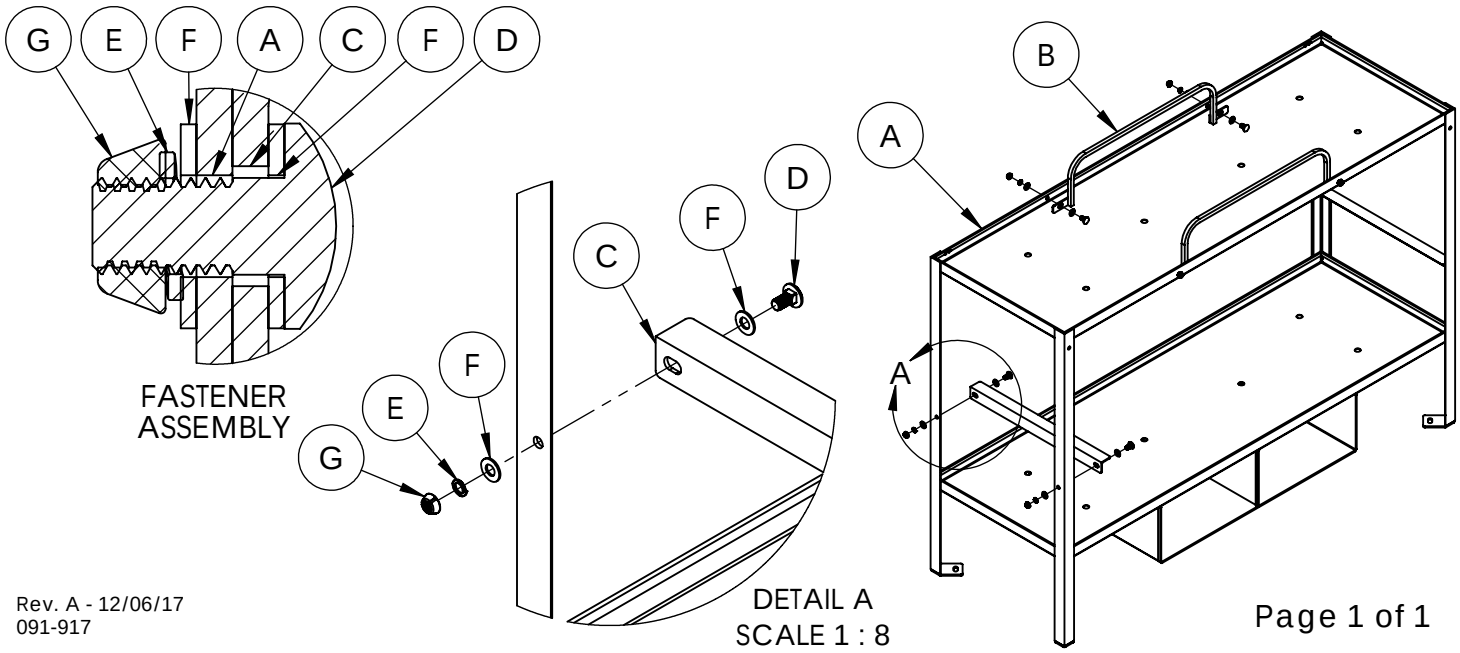
6. Fully tighten all Tri-Groove Nuts with #40 tri-Groove Socket.